End-of-life information

SCALA2, SCALA3



GRUNDFOS

1. SCALA2, SCALA3 GO

End-of-Life Information

This document is intended for treatment and recycling facilities and provides information on components, materials, handling, and dismantling of the product when it reaches the end of its life, to facilitate correct and environmentally sound treatment.

Grundfos SCALA2, SCALA3 GO must be disposed of in accordance with local regulations, using authorized WEEE collectors and designated collection points. If these are not available, please contact the nearest Grundfos company or service workshop.

Safety risk

- **Safety risk related to materials used.**
  The product, being an electrical equipment, contains materials and substances that may be hazardous and pose risks to the environment if it becomes waste and is not handled correctly. Please refer to the *EU's SCIP database* and the REACH SVHC Content lookup tool via this *link* to find the SVHC content present in the product.
- **Safety risk related to handling the product.**
  Take care when handling the motor due to the weight.
  The bearings include non-toxic grease, and inside there may be remains of non-toxic lubrication for assembly. We recommend avoiding contact with the heat paste between the heatsink and the printed circuit board (PCB). It is not dangerous or toxic, just unpleasant and difficult to get rid of again.

Dismantling the product

The main materials of the components are:

- copper
- iron
- Aluminium
- electronic components
- composite materials

and can therefore be recycled to a large extent – depending on the national possibilities for recycling.

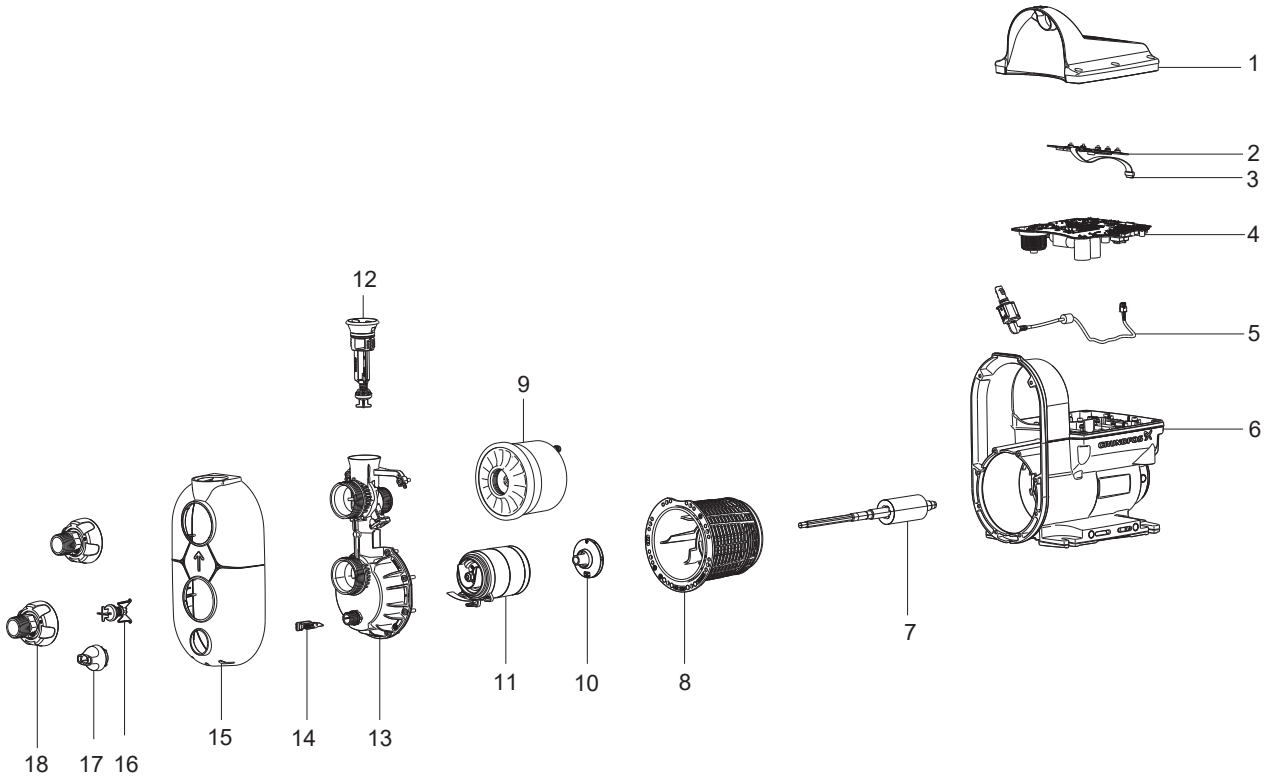

Pos.	Designation	Material
1	Control box cover	Composite
2	Operating panel	Electronic components
3	Connection cable for operating panel	
4	Electronics	PCB with SMD components
5	Cable	
6	Combined pump and stator housing	Aluminium
	Cooling jacket	EN 1.4301/AISI 304 stainless steel
	Stator	Copper
7	Shaft	AISI 416 stainless steel
8	Center part	Composite
9	Pressure tank complete	Composite, Butyl and EN 1.4301 / AISI 304
10	Shaft seal	Carbon/Ceramic
11	Chamber stack (four stages)	Composite
12	Non-return valve, outlet	Composite
13	Connection part	Composite
14	Locking pin	Polyoxymethylene
15	Pump cover	Composite
16	Non-return valve, inlet	Composite
17	Drain plug	Composite
18	Thread R 1" / NPT 1"	Composite

© Grundfos Holding A/S 11.2026

93811175

ECM: 1466402	11.26

Grundfos Holding A/S
Poul Due Jensens Vej 7
DK-8850 Bjerringbro
Tel: +45 87 50 14 00
www.grundfos.com

GRUNDFOS